Motor Cable Reel Demand Planning Sheet

Company：	Contact Person：
	Department： Ext：
Tel：	E-Mail：
Demand：	Traveling Distance：
Usage： ☐ Gantry Crane ☐ Other ☐ Cart	Reeling Type： ☐ Horizontal ☐ Middle Feeding ☐ Vertical ★ ☐ End Feeding
Voltage： V Frequency： HZ Speed： M/min	
Cable： mm² X C X M Diameter： mm Weight： Kg/M	
Motor Capacity：	Winding Force：
Outer Diameter： D Inner Diameter： d' Width W X Ar Row	

Specification	Quantity	Unit Price	Total Price
Model：	Set	USD	USD
Middle+Roller Guide：	Set	USD	USD
Cable Specification： mm² X C	M	USD	USD
Installation Guide (Travel Expenses)	Day	USD	USD
Lead Time： Day Expect Delivery Time：	Total：US Dollars		
Space Limit： ☐ No ☐ Yes （ L： M X W： M X H： M ）			
Remarks：			

http：//www.kyec-mit.com.tw
E-mail：taiwan.kyec@msa.hinet.net
Head Office：No.6, Ln. 65, Dinghu 2nd St., Guishan Dist., Taoyuan City 33378, Taiwan (R.O.C.)
TEL：（+886）3-328-7888 FAX：（+886）3-328-0770
Taichung Office / TEL：（+886）4-2358-0075 FAX：（+886）4-2358-2646
Kaohsiung Office / TEL：（+886）7-384-5997 FAX：（+886）7-380-8729

2018/03 800

坤溢企業 KYEC

Cable Reel

··· SINCE 1974 ···

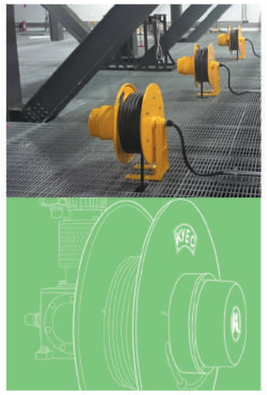

Part1 Spring Cable Reel

Definition of Our Type

KCRS3W-4P

- Quantity of Poles
- Quantity of Springs
  - None:1
  - W:2
  - T:3
  - F:4
- Cabel Reel Spring
- KYEC®

●KCRS1、KCRS11

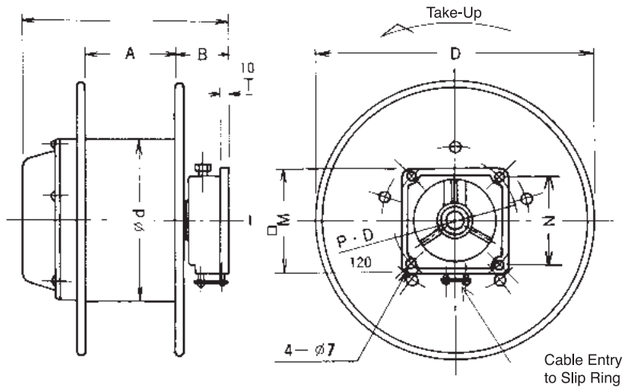

●Sheave Guide Chart

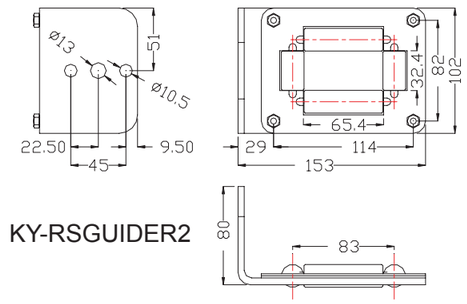

KY-RSGUIDER2

●Bracket Chart

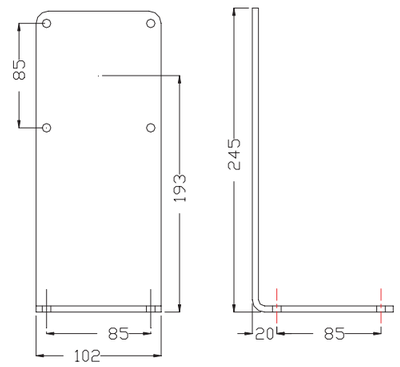

Specification and Dimension

Type	Max Length (horizontally furl)	Maximum		Reel Dimension									Weight (KG)
		Amps	Poles	A	B	C	D	d	H	L	M	N	
CRS 1	2X3 10M	15A-30A	3P-12P	93	55	195	290	160	340	195	105	85	8
CRS 11	2X3 11M	15A-30A	3P-12P	90	60	195	320	200	355	205	110	85	10
CRS 2W	3.5X3 18M	30A	3P-16P	110	85	225	400	230	425	310	145	125	14
CRS 216W	3.5X3 16M	30A	3P-16P	110	85	225	400	230	425	310	145	125	16
CRS 3W	3.5X3 25M	30A	3P-16P	110	85	275	500	230	525	310	145	125	18
CRS 4W	5.5X3 18M	40A-60A	3P-24P	90	120	295	500	285	545	368	235	195	32
CRS 4T	5.5X3 27M	40A-60A	3P-24P	168	120	380	650	285	705	438	235	195	41
CRS 4F	5.5X3 38M	40A-60A	3P-24P	168	120	380	650	285	705	438	235	195	45
CRS 4T20	14X3 22M	40A-60A	3P-24P	168	120	380	650	285	705	438	235	195	46
CRS 5T	8X3 36M	40A-60A	3P-16P	160	130	380	650	353	705	450	235	245	48
CRS 5T20	14X3 26M	40A-60A	3P-16P	160	130	380	650	353	705	450	235	245	75
CRS 5F	8X3 48M	40A-60A	3P-16P	160	130	380	650	353	705	450	235	245	72
CRS 6F	14X3 56M	40A-60A	3P-16P	205	160	440	750	440	815	500	300	260	110

※Note: The cable reeling length should be 80% of the maximum length to compensate the spring fatigue in the future.
The cable diameter should be smaller than the cable entry flange diameter. Please refer to next page.

●KCRS2W、KCRS3W

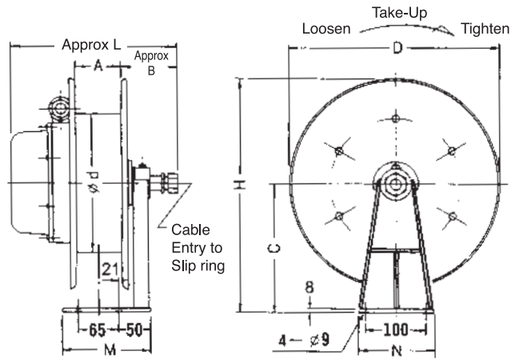

●KCRS4F、KCRS4W、KCRS5F KCRS5T、KCRS6T

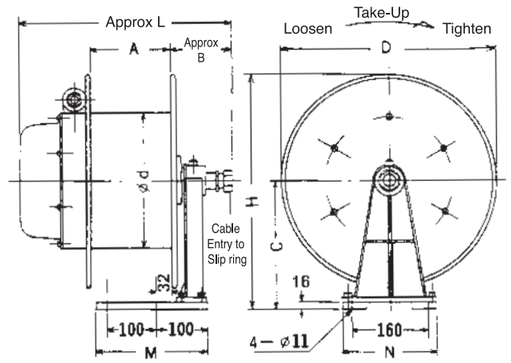

How to Choose Your Type

1. Cable's diameter should be under flange's .
2. Cable weight (per meter) × Length < Maximum Reel Torque
   Ex:3.5mm/4C as Cable Dim shows 0.41 kg/m, 10m×0.41 kg/m = 4.1kg < (7kg)

Cross-refer the Specification (P.5) find the Choice is CRS 216W.

Type	Cable Entry Flange Dim mm	Annulus	Max Winding Force F (kgf)	Max Torque kgf*m
CRS 1	14	15	2	0.2
CRS 11	13	13	3	0.3
CRS 2W	13	35	3.5	0.4
CRS 216W	16	20	7	0.8
CRS 3W	13	35	3.5	0.4
CRS 4W	22	25	7.5	1.06
CRS 4T	22	37	7.5	1.06
CRS 4F	22	50	7.5	1.06
CRS 4T20	22	26	17	2.42
CRS 5T	26	37	10	1.76
CRS 5T20	26	30	17	3.0
CRS 5F	26	50	10	1.76
CRS 6F	33	60	24	5.28

Reel mounted on the moving equipment will be an effort-saving way.

Design(Cross-refer Questionnaire)

Definition

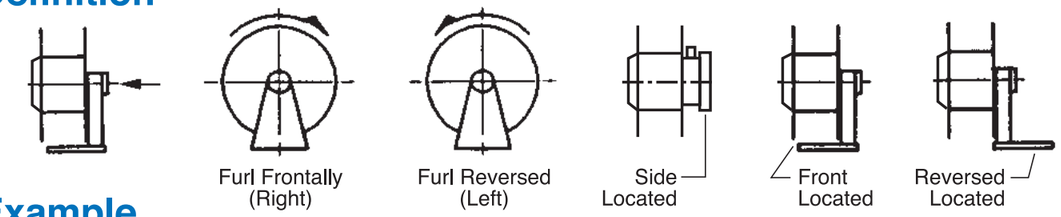

Example

Reel Mounted on Equipment	Reel Mounted on Equipment
1.Horizontally Furl fe > (w × ℓ) × 9.807 ℓ ≒ 2h 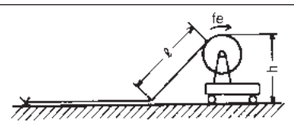	**6.Horizontally Furl** Fe > W × (ℓ + L') × μ × 9.807 μ ≒ 0.7～0.6 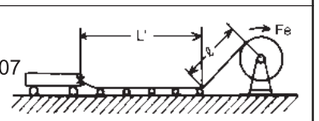
2.Horizontally Poised Furl $Fe > \frac{w \times L^2 \times 9.807}{8 \times S}$ 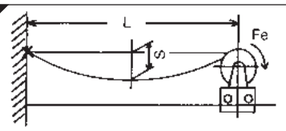	**7.Horizontally Poised Furl** $Fe > \frac{w \times L^2 \times 9.807}{8 \times S}$ 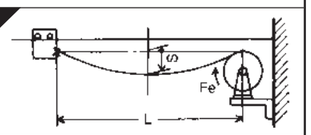
3.Upright Setting fe > w × 9.807 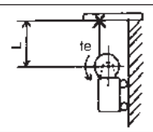	**8.Upright Setting** fe > w × 9.807 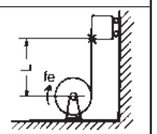
4.Downward Setting Fe > (w × L + △) × 9.807 △ = Weight of Load (kg) 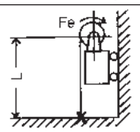	**9.Downward Setting** Fe > (w × L + △) × 9.807 △ = 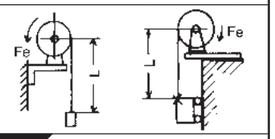
5.Horizontally/Middle Power In 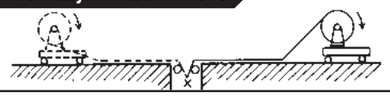 Fe calculated as Type 1	**10.Horizontally/Middle Power In** Fe calculated as Type 6

Fe=Max Efficient Winding Force(kgf) fe=Beginning Winding Force(kgf) L=Max Furl Length W=Cable Weight (kg/m) L'=Length on Ground
ℓ=Free Length (m) S= Poised Drop Allowable Length μ=Efficient Value

Efficient Winding Force(kgf)

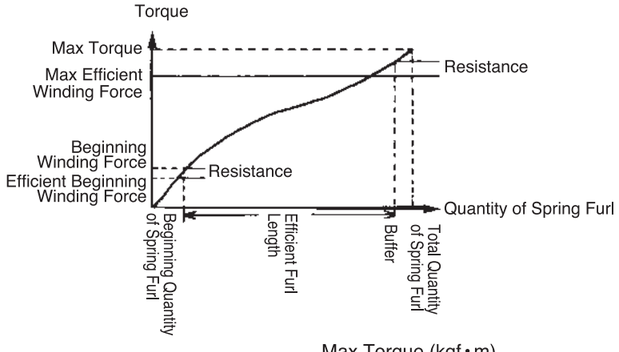

Max Winding Force $F(kgf) = \frac{\text{Max Torque (kgf·m)}}{\text{Reel Radius (m)}}$

Max Efficient Winding Force Fe(kgf) = μ·F (kgf) μ=0.7

When quantity of poles is over 4 or speed is over 40 m/min or other resistant cause occur, by all means add the buffer (reduce the μEfficient Value).

Cable Dim

Type Poles / Conductor Cross Section Area mm²	3 poles		4 poles	
	O.D mm	Weight kg/m	O.D mm	O.D mm
1.25	11.5	0.195	13.0	0.245
2.0	12.5	0.23	13.5	0.285
3.5	14.0	0.33	15.5	0.41
5.5	15.5	0.43	17.5	0.54
8.0	17.0	0.54	19.0	0.69
14.0	22.0	0.905	25.0	1.15
22.0	28.0	1.73	31.0	1.82
(30.0)	33.0	1.96	36.0	2.5
38.0	35.0	2.34	39.0	3.0
(50.0)	39.0	2.85	43.0	3.64
60.0	42.0	3.45	47.0	4.41
(80.0)	49.0	4.64	55.0	5.94
100.0	54.0	5.63	60.0	7.2

Spring cable reel installment

Step

1. Power-in terminal enter "D" slip ring unit through "G" hollow axis, connected with "E" slip ring. (chart 1)

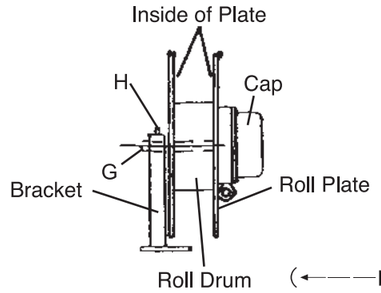

Chart 1

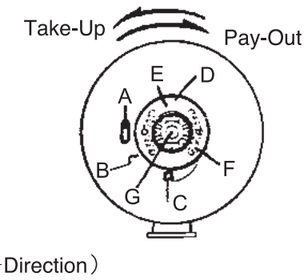

Chart 2

A : ⬭ Cable Hole
B : Cable Fixed Flake
C : Cable End
D : Slip Ring Unit
E : Slip Ring
F : Carbon Brush Base
G : Hollow Axis
H : Axis Located Screw

2. Cable pierces "A" hole ⬭ from the inside of roll plate and through "B" fixed point into "C" cable end. Connect the cable with carbon brush and arrange the cables. Lock the outside cap after connection.*Avoid cable hooking the screw parts, cables in the spring ring unit should be leaned aside as possible as you can. (chart 2)
3. Roll all cables clockwise in the roll plate (chart 3), or handle the cable and move roll plate anti-clockwise till all cables completed (chart 4)
4. Locate the cable reel.

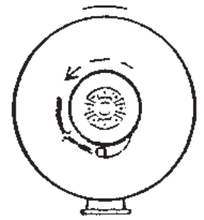

Chart 3

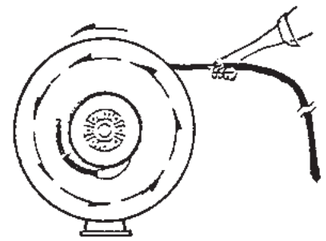

Chart 4

5. Move the plate 2 to 3 cycles (snail shape spring will save the kinetic energy). Pull cable out through the sheave guide; make a trial run after connect power.

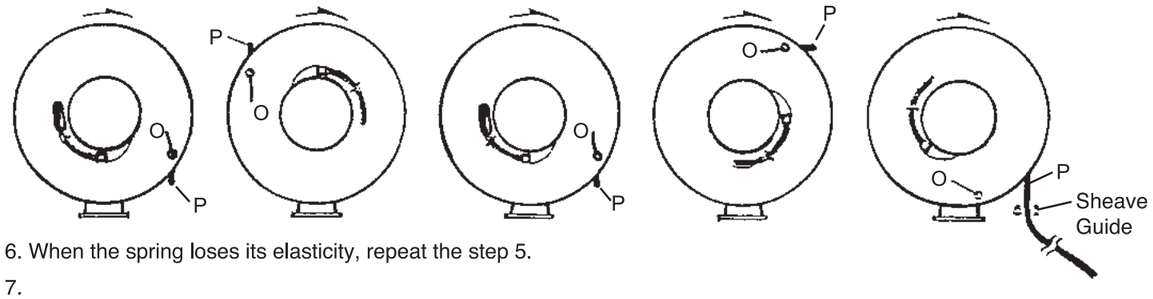

6. When the spring loses its elasticity, repeat the step 5.
7.

Moving cart roll horizontally

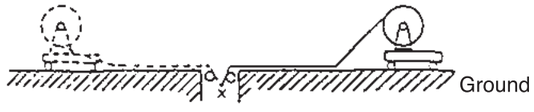

with sheave guide.
(recommended standard way)

Moving cart on ground

(not recommended due to the additional kinetic friction).

Performance — Spring Cable Reel —

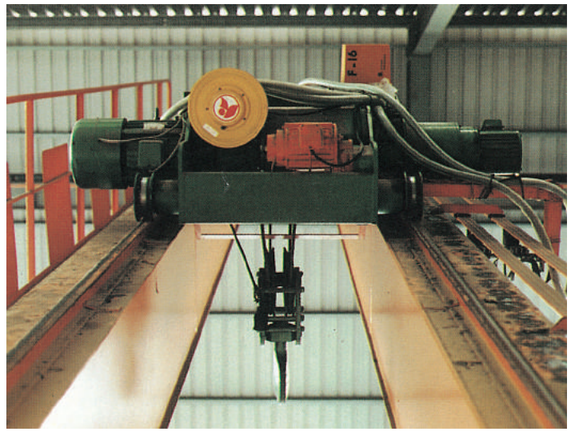

For Glass Factory Vacuum Suction Cups

For Civil Engineering

Avoid fixing the electric door, only I-beam needed to suit

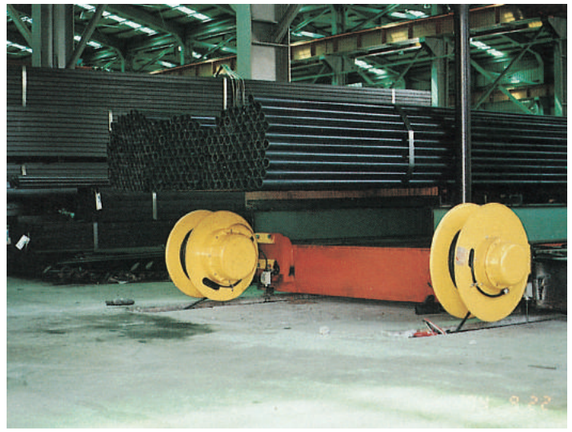

For Steel Factory: Moving Cart

Da Dong Art Center: Power Supply for Stage

For Press Machine

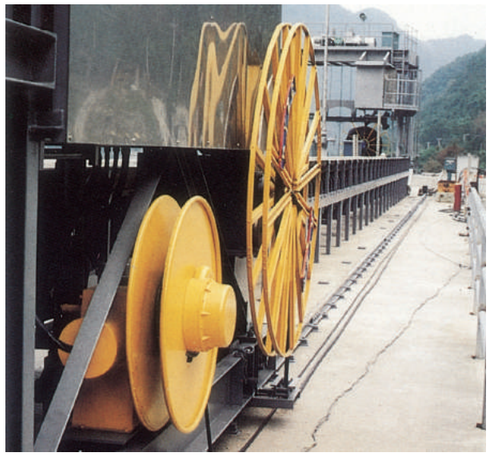

Harrow sewage machine in Tien- Lun Dam

For multi function hoist equipment in precast Cement Factory

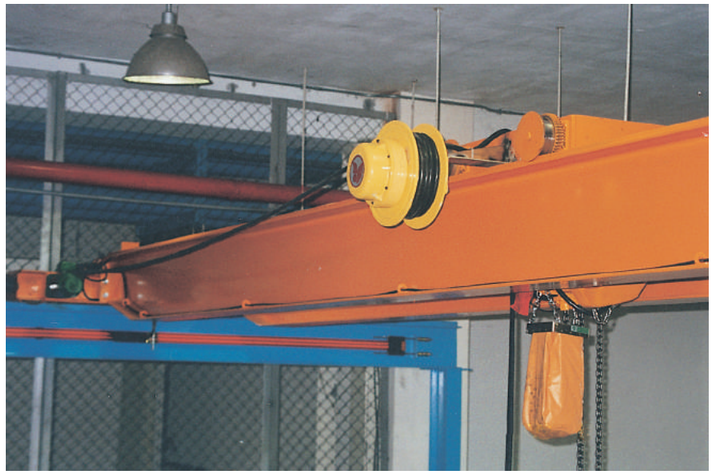

Overhead Crane Power Supply of Bridge Direction

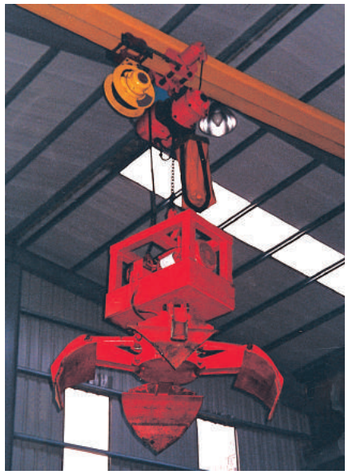

Power Supply for Grab in Steel Factory

For Gate Door Opening

Slip Ring

Part2 Motor Cable Reel

Definition of Our Type（T Type）

T2 S L - 130 - 55 - 10

- Width (cm)
- Inner Diameter (cm)
- Outer Diameter (cm)
- Motor (V : Vertical , L : Horizontal)
- Motor Capacity (S= 1/2 , H=1 , M=2) H.P
- Driver (T2 , T4)

T Type Motor Cable Reel

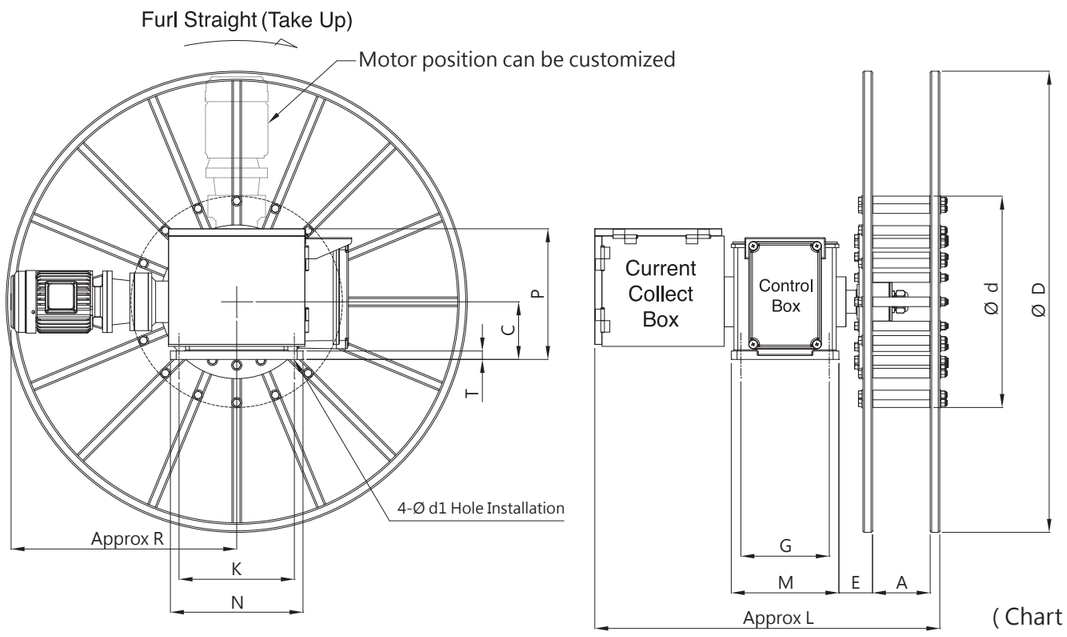

(Chart 1)

Type	Torque kg.m	Winding force kgf	Motor HP	Chart	Dimension (mm) D	d	A	C	E	L	R	P	G±1	K±1	M	N	T	d1	Weight kg
T2SL-80-40-17	13	65	1/2	Chart 1	800	400	170	150	77.5	910	587	340	230	300	280	345	22	18	175
T2SL-130-55-15	13	47	1/2	Chart 1	1300	550	150	150	87.5	900	587	340	230	300	280	345	22	18	210
T2HL-130-55-15	15	54.5	1	Chart 1	1300	550	150	150	87.5	900	650	340	230	300	280	345	22	18	220
T2HL-160-55-15	15	54.5	1	Chart 1	1600	550	150	150	87.5	900	650	340	230	300	280	345	22	18	240
T4ML-130-75-17	30	80	2	Chart 2	1300	750	170	211	71.5	950	750	430	170	180	222	318	25	22	285
T4ML-160-75-17	30	80	2	Chart 2	1600	750	170	211	71.5	950	750	430	170	180	222	318	25	22	295
T4ML-160-90-17	30	66	2	Chart 2	1600	900	170	211	71.5	950	750	430	170	180	222	318	25	22	295
T4ML-180-90-22	30	66	2	Chart 2	1800	900	220	211	71.5	1000	750	430	170	180	222	318	25	22	315

Cable Length / Cable Dimension	Horizontally furl 60m	70m	80m	90m	100m	110m	120m	130m	140m	150m
16mmx4C 0.91kg/m Ø22.7	T2SL-80	T2SL-80	T2SL-80	T2SL-80	T2SL-80	T2SL-130	T2SL-130	T2SL-130	T2SL-130	T2SL-130
25mmx4C 1.35kg/m Ø26.9	T2SL-80	T2SL-80	T2SL-80	T2HL-130	T2HL-130	T2HL-130	T2HL-130	T2HL-130	T2HL-130	T2HL-130
35mmx4C 1.89kg/m Ø31.5	T2SL-80	T2HL-130	T2HL-130	T4ML-130	T4ML-130	T4ML-130	T4ML-130	T4ML-160	T4ML-160	T4ML-160

※Note: The cable is PUR reeling cable. Please inform us your cable specification for calculation. In the table, the speed is assumed to be 30m/min (60Hz).

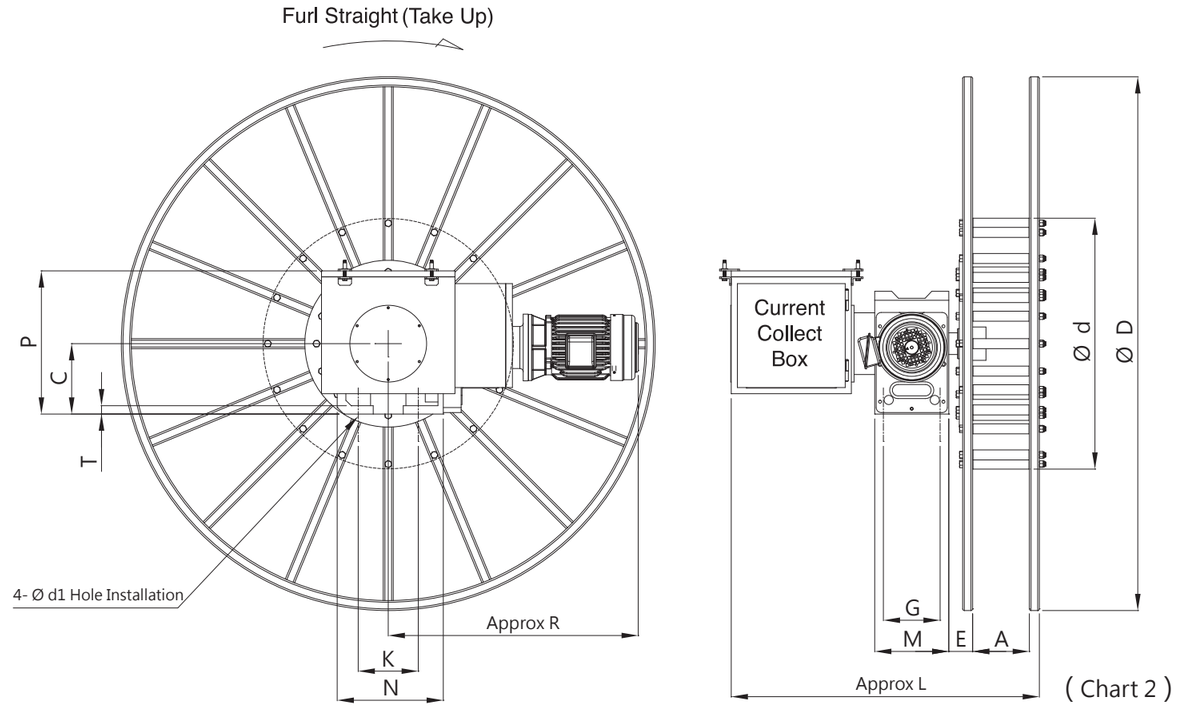

(Chart 2)

Control Panel Explanation

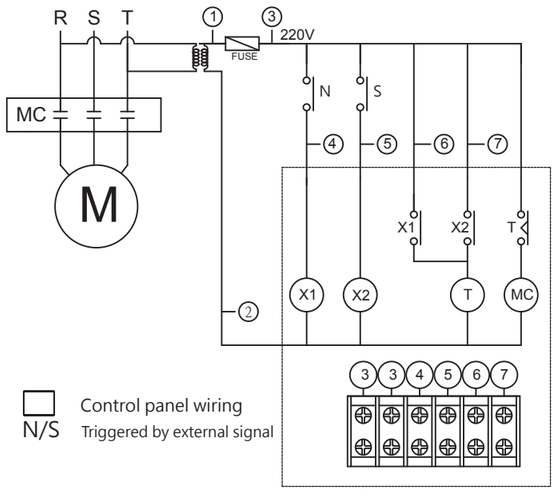

Wiring Chart

Chart 1: Single direction

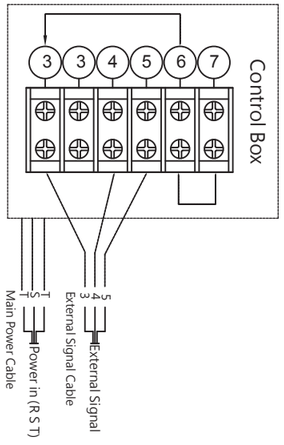

Chart 2: Two directions

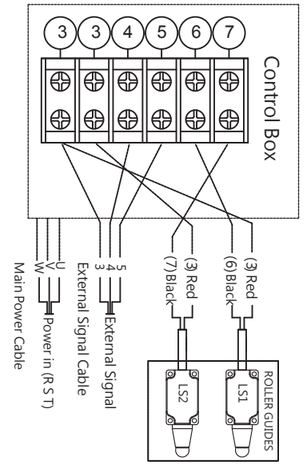

Ampere Capacity of Slip Ring (Nominal Voltage AC600V)

Nominal Current	Poles (Maximum Poles)												
40A	—	—	—	—	—	—	—	—	—	—	—	—	36
60A	—	—	—	—	—	—	—	—	—	—	—	—	36
250A	3	4											

※Note: Special poles can be customized

Part 3 Motor Cable Reel

Definition of Our Type

M1 E V 4 N - 71 - 28 - 16

- Width (cm)
- Inner Diameter (cm)
- Outer Diameter (cm)
- Reel Code (N-Custom Size)
- Motor (V : Vertical , L : Horizontal)
- Motor Capacity (S= 1/2 , H=1 , M=2) H.P
- Driver (T2 , T4)

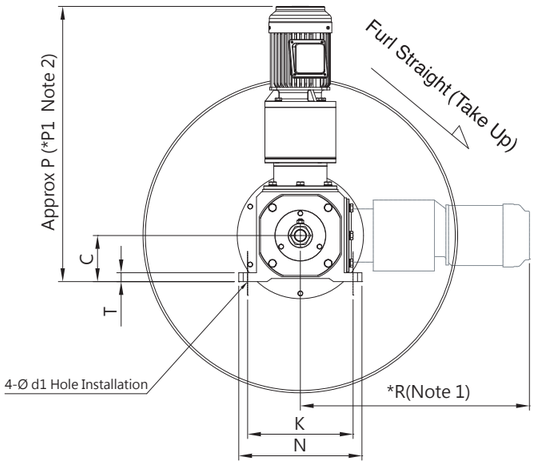

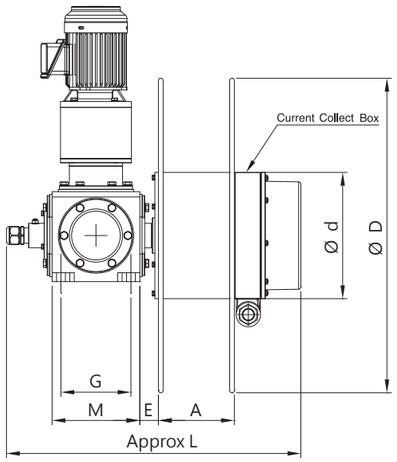

(Chart 1)

Note 1): *R represents motor with horizontal position *R = P - C
Note 2): * P1 : M1 = 220 , M3 = 340

Type	Torque kg.m	Winding Force kgf	Motor HP	Chart	Dimension (mm) D	d	A	C	E	L	P	P1	R	G±1	K±1	M	N	T	d1	Weight kg
M1EV3-49-23-11	4	35	1/4	Chart 1	495	231	110	104	40	570	630	----	----	158	238	198	278	20	15	58
M1EV3-65-23-11	4	35	1/4	Chart 1	650	231	110	104	40	570	630	----	----	158	238	198	278	20	15	63
M1EV4-71-28-16	4	28	1/4	Chart 1	710	285	168	104	42	670	630	----	----	158	238	198	278	20	15	66
M1EV4N-71-28-9	4	28	1/4	Chart 1	710	285	90	104	42	590	630	----	----	158	238	198	278	20	15	64
M1EV5-71-35-16	4	23	1/4	Chart 1	710	353	160	104	40	660	630	----	----	158	238	198	278	20	15	74
M1EV5N-71-35-9	4	23	1/4	Chart 1	710	353	90	104	40	590	630	----	----	158	238	198	278	20	15	72
M1SV3-65-23-11	7.7	67	1/2	Chart 1	650	231	110	104	40	570	650	----	----	158	238	198	278	20	15	70
M1SV4-71-28-16	7.7	54	1/2	Chart 1	710	285	168	104	42	670	650	----	----	158	238	198	278	20	15	74
M1SV4N-71-28-9	7.7	54	1/2	Chart 1	710	285	90	104	42	590	650	----	----	158	238	198	278	20	15	72
M1SV5-71-35-16	7.7	44	1/2	Chart 1	710	353	160	104	40	660	650	----	----	158	238	198	278	20	15	82
M1SV5N-71-35-9	7.7	44	1/2	Chart 1	710	353	90	104	40	590	650	----	----	158	238	198	278	20	15	80
M1SV6-75-44-20	7.7	35	1/2	Chart 1	750	440	205	104	40	720	650	----	----	158	238	198	278	20	15	85
M3HL-80-40-17	19	95	1	Chart 2	800	400	170	150	106	866	----	380	776	168	280	210	322	22	18	171
M3HV-120-55-15	19	69	1	Chart 2	1200	550	150	150	106	866	817	----	----	168	280	210	322	22	18	192
M3HV-160-55-15	19	69	1	Chart 2	1600	550	150	150	106	866	817	----	----	168	280	210	322	22	18	224

Cable Dimension \ Cable Length	Horizontally furl 60m	70m	80m	90m	100m	110m	120m	130m	140m	150m
4mmx4C 0.25kg/m Ø12.4	M1EV3-495	M1EV3-495	M1EV3-495	M1EV3-650	M1EV3-650	M1EV3-650	M1EV3-650	M1EV3-650	M1EV3-650	M1EV3-650
6mmx4C 0.36kg/m Ø14.8	M1EV3-495	M1EV3-650	M1EV3-650	M1EV3-650	M1EV3-650	M1EV3-650	M1EV3-650	M1EV3-650	M1EV4-710	M1EV4-710
10mmx4C 0.59kg/m Ø18.2	M1EV3-650	M1EV3-650	M1EV3-650	M1EV3-650	M1EV4-710	M1EV4-710	M1EV4-710	M1SV4-710	M3HL-800	M3HL-800
16mmx4C 0.91kg/m Ø22.7	M1SV4-710	M1SV4-710	M1SV5-710	M1SV6-750	M3HL-800	M3HV-1200	M3HV-1200	M3HV-1200	M3HV-1200	M3HV-1200
25mmx4C 1.35kg/m Ø26.9	M1SV5-710	M3HL-800	M3HV-1200	M3HV-1200	M3HV-1200	M3HV-1200	M3HV-1200	M3HV-1200	M3HV-1200	M3HV-1200
35mmx4C 1.89kg/m Ø31.5	M3HL-800	M3HL-800	M3HV-1200	M3HV-1200	M3HV-1200	M3HV-1200	M3HV-1600	M3HV-1600	M3HV-1600	M3HV-1600

※Note: The cable is PUR reeling cable. Please inform us your cable specification for calculation.

Definition of Our Type

M3 H V -120 -55 - 15

- Width (cm)
- Inner Diameter (cm)
- Outer Diameter (cm)
- Motor (V : Vertical , L : Horizontal)
- Motor Capacity 1H.P
- Driver

Coiled Speed & Cable Entry Flange Dim

Reel Code \ Frequency	Coiled Speed: M/min 50HZ	60HZ	Cable Entry Flange Dim mm
3	28	33	24
4	34	41	28
5	43	51	28
6	53	64	28
M3	49	59	38

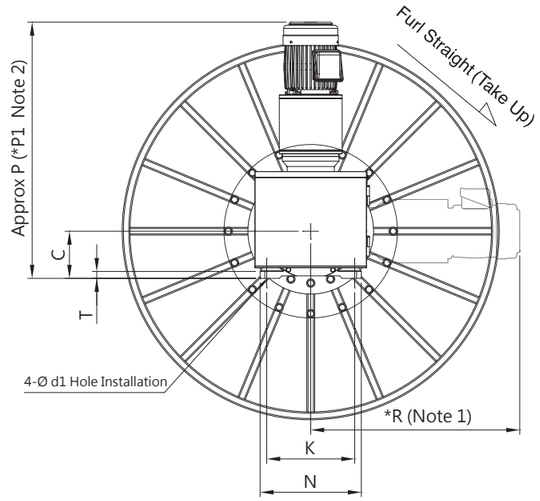

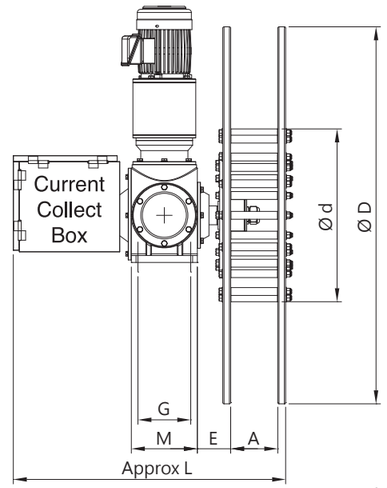

(Chart 2)

Ampere Capacity of Slip Ring (Nominal Voltage AC600V)

Current	Poles													Applicable Model
30A	3	4	6	8	10	12	14	16						M1EV3 , M1SV3
40A	3	4	6	8	10	12	14	16	18	20	22	24	26	M1EV4, M1SV4, M1EV5, M1SV5, M1SV6, M3HV
60A	3	4	6	8	10	12								M1EV4, M1SV4, M1EV5, M1SV5, M1SV6, M3HV
250A	3	4												M3HV

Table For Poles Quantity And Size L (Unit:mm)

Current \ Poles	3	4	6	8	10	12	14	16	18	20	22	24	26
30A				45	45	90	90	135					
40A				70	70	140	140	140	210	210	210	280	280
60A			70	140	140	210							
250A													

Control Panel Explanation

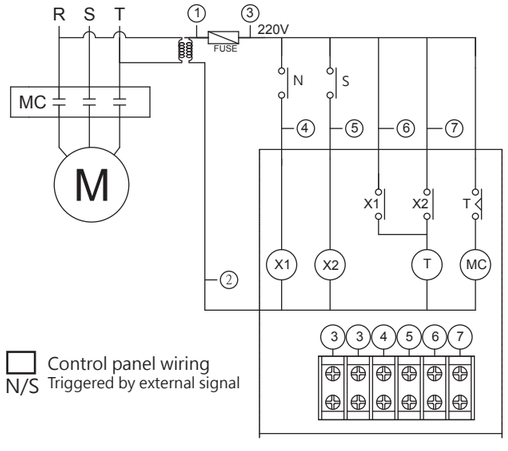

Control panel wiring
N/S Triggered by external signal

Wiring Chart

Chart 1: Single direction

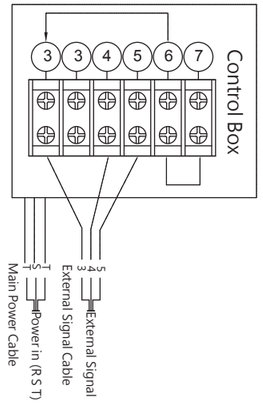

Chart 2: Two directions

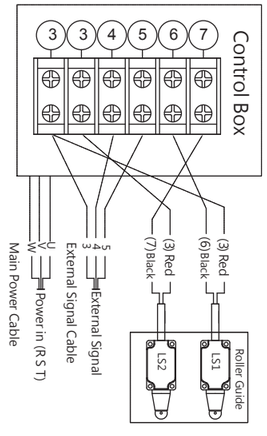

Definition of Our Type

M5 M.2 B - 180 - 80 - 20

- Width (cm)
- Inner Diameter (cm)
- Outer Diameter (cm)
- Auxiliary Brake
- Transmission (1=2Set 2=3Set)
- Motor Capacity
- Driver

Coiled Speed & Cable Entry Flange Dim

Frequency / Reduction ratio	Reeling Speed: M/min		Cable Entry Flange Dim
	50HZ	60HZ	mm
57.85	35	43	80
66.75	30	38	80

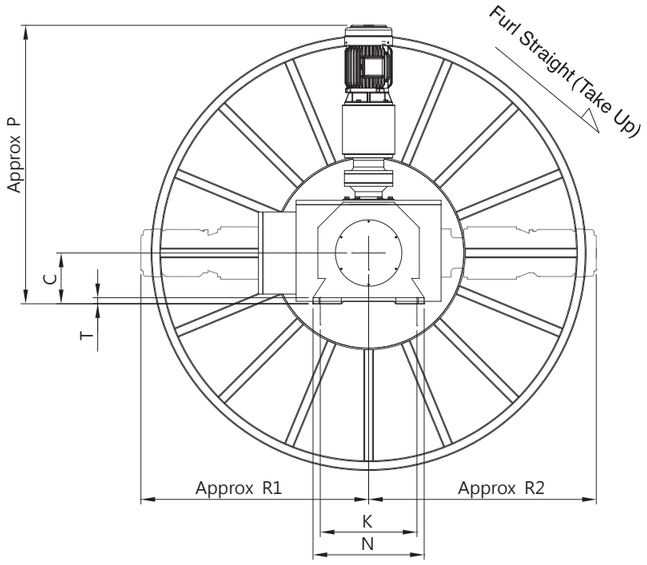

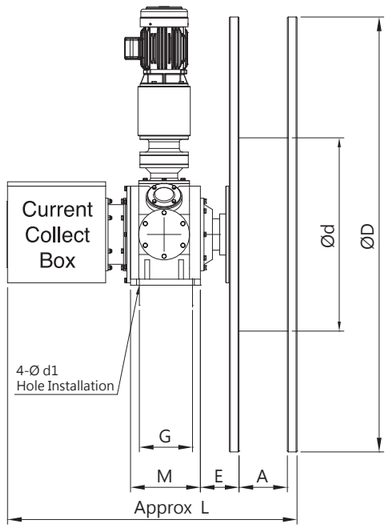

Type	Torque kg.m	Winding Force kgf	Motor HP	Reduction Ratio	Dimension (mm)															Weight
					D	d	A	C	E	L	P	P1	R	G±1	K±1	M	N	T	d1	kg
M5M-180-80-20	43.3	108	2	57.85	1800	800	200	210	160	1200	1210	----	----	220	400	289	460	25	20	550
M5M-180-80-20	50	125	2	66.75	1800	800	200	210	160	1200	1210	----	----	220	400	289	460	25	20	550
M5M.1-220-80-20	86.6	216	2X2	57.85	2200	800	200	210	160	1200	1210	1005	----	220	400	289	460	25	20	630
M5M.1-220-80-20	100	250	2X2	66.75	2200	800	200	210	160	1200	1210	1005	----	220	400	289	460	25	20	630
M5M.2-220-80-20	129.9	324	2X3	57.85	2200	800	200	210	160	1200	1210	1005	1005	220	400	289	460	25	20	710
M5M.2-220-80-20	150	375	2X3	66.75	2200	800	200	210	160	1200	1210	1005	1005	220	400	289	460	25	20	710

Cable Length / Cable Dimension	Horizontally Furl									
	60m	70m	80m	90m	100m	110m	120m	130m	140m	150m
50mmx4C 2.62kg/m Ø35.5	M5M	M5M	M5M	M5M	M5M.2	M5M.2	M5M.2	M5M.2	M5M.2	M5M.2
70mmx4C 3.71kg/m Ø40.5	M5M	M5M.2	M5M.2	M5M.2	M5M.2	M5M.2	M5M.2	M5M.2	M5M.2	M5M.2
95mmx4C 4.81kg/m Ø50.9	M5M.2	M5M.2	M5M.2	M5M.2	M5M.2	M5M.2	M5M.2	M5M.2	M5M.2	M5M.3
120mmx4C 5.915kg/m Ø53.2	M5M.2	M5M.2	M5M.2	M5M.2	M5M.2	M5M.2	M5M.2	M5M.3	M5M.3	M5M.3
150mmx4C 7.12kg/m Ø56.3	M5M.2	M5M.2	M5M.2	M5M.2	M5M.3	M5M.3	M5M.3	M5M.3	M5M.3	M5M.3

※Note: The cable is PUR reeling cable. Please inform us your cable specification for calculation.

Ampere Capacity of Slip Ring (Nominal Voltage AC600V)

Nominal Current	Poles (Maximum Poles)												
40A	—	—	—	—	—	—	—	—	—	—	—	—	36
60A	—	—	—	—	—	—	—	—	—	—	—	—	36
250A	3	4											
400A	3	4											

※Note: Special poles can be customized

Reelable cables for spring and motorized cable reel

RoHS

Reelable cables for spring and motorized cable reel

- Conductor : bare copper strands acc. to IEC 60228 EN 60228, VDE 0295, class 5
- Insulation : special polymer
- Color Code : coloured acc. to HD 308 (VDE 0293 part 308); from 6 cores black cores with consecutive numbers acc. to EN 50334; green-yellow earth wire from 3 cores
- Stranding : specially adjusted layering around central suspension unit
- Inner Sheath : PUR
- Supporting screen : high-tech yarn
- Outer sheath : PUR
- Sheath color : black

Outstanding Features

- Corresponds to low voltage guideline 73/23/EWG CE
- Path feed rate up to 120 m/min
- High winding and unwinding strength
- Small outer diameter
- Small cable weight

no. of cores x cross section n x mm^2	Outer diameter (mm)	Copper figure (kg/ km)	Cable weight (kg/km)	min breaking load of suspension unit (N)
4G 1.5	9	57.6	119	1340
5G 1.5	9.8	72	142	1690
7G 1.5	11.8	100.8	204	2150
12G 1.5	16.6	172.8	359	2600
18G 1.5	16.4	259.2	430	2600
4G 2.5	10.4	96	170	1345
5G 2.5	11.6	120	213	2100
7G 2.5	13.8	168	299	2500
12G 2.5	19.6	288	531	2900
18G 2.5	19.7	432	641	3450
24G 2.5	23.8	576	879	2700
30G 2.5	26.6	720	1099	4200
50G 2.5	32.4	1200	1739	6750
4G 4	12.4	153.6	255	1690
12G 4	24	460.8	835	5000
4G 6	14.8	230.4	369	1860
4G 10	18.2	384	592	2300
4G 16	22.7	614.4	915	2800
3G 25 + 3G 6	24.3	892.8	1188	3300
4G 25	26.9	960	1351	3300
3G 35 + 3G 6	28.1	1180.8	1577	3300
4G 35	31.5	1344	1893	3300
3G 50 + 3G 10	31.9	1728	2264	3800

Nominal Voltage	0.6/1 kV
Testing Voltage	4000V
Current-carrying capacity	acc. to DIN VDE 0298-4
Min. bending radius	
For laying and installation (fixed laying)	<12 mm 3 x d / > 12 mm 4xd
For repeated winding	6 x d
Guided on deflection	7.5 x d
Temperature range	
Fixed laying	-50/+90 °C
Flexible application	-40/+90 °C
Halogen-free	Halogen-free acc. to DIN VDE 0472 part 815 and IEC 60754-1
Oil resistance	very good TMPU acc. to DIN VDE 0282 part 10 + HD 22.10
Chemical resistance	good against acids, alkalines, solvents,hydraulic liquids, etc.
Weather resistance	very good
Sunlight resistance	very good -enhanced due to black sheath colour
Tensile strength	acc. to DIN VDE 0298-3 section 7.1
Mechanical characteristics	the main mechanical characteristics accomplished by the PUR outer sheath are: - high tensile strength - high tear strength - high abrasion resistance - high notch resistance
Absence of harmful substances	acc. to RoHS directive of the European Union

※ Other dimensions and colors are possible on request.

Performance — Motor Cable Reel —

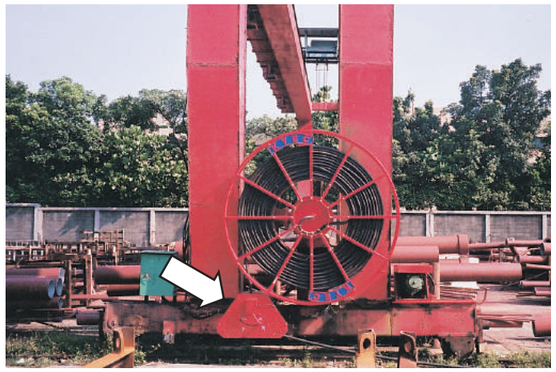

CSBC Gantry Crane Motor Cable Reel

Moving Cart Motor Cable Reel

For Agriculture: Automatic Watering

CSBC: For Moving Cart

Hsuehshan Tunnel TBM

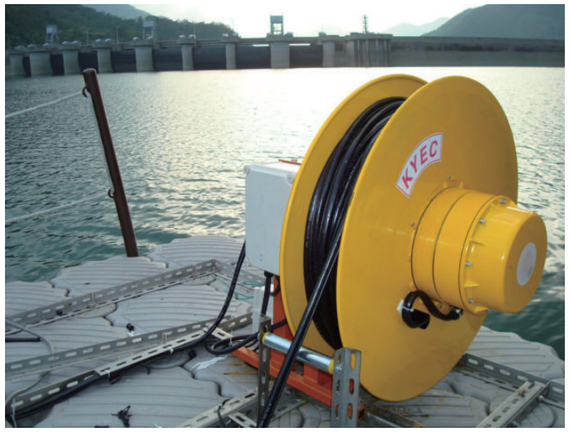

Fei-Tsui Reservoir Hydrology Measurment

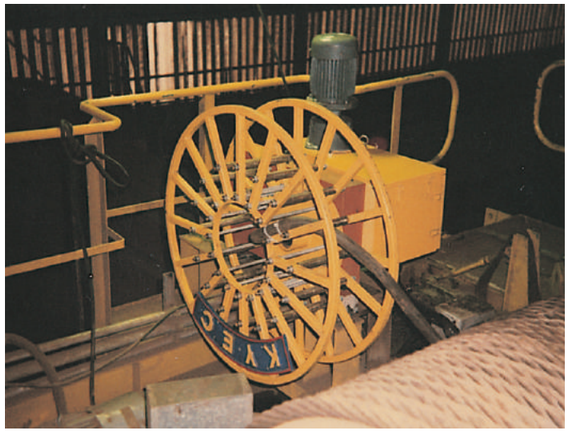

Crane Grabber in Dragon Steel（Vertical 30M）

KeeLung Harbor：Cruise Terminal

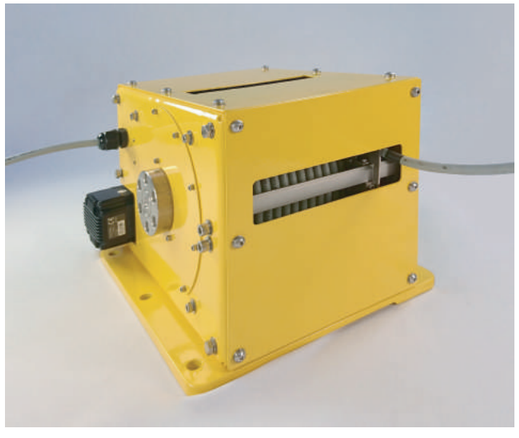

Customized Motor Cable Reel For Medical Machine

For Crane Grab

Train Rails Cleaner